Exploded View S6-650

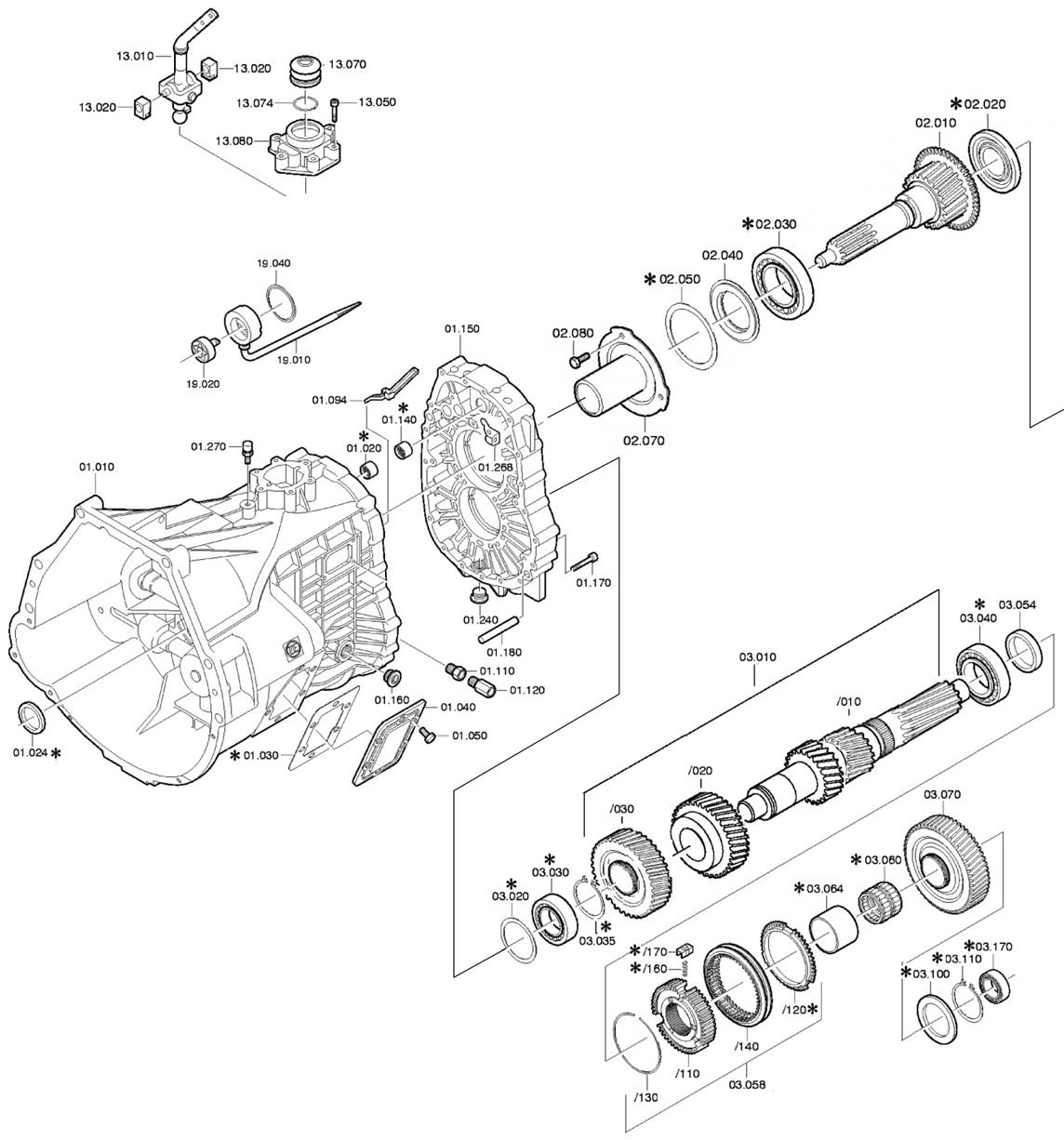

Remanufactured Transmissions, Spare Parts, and Kits Catalog

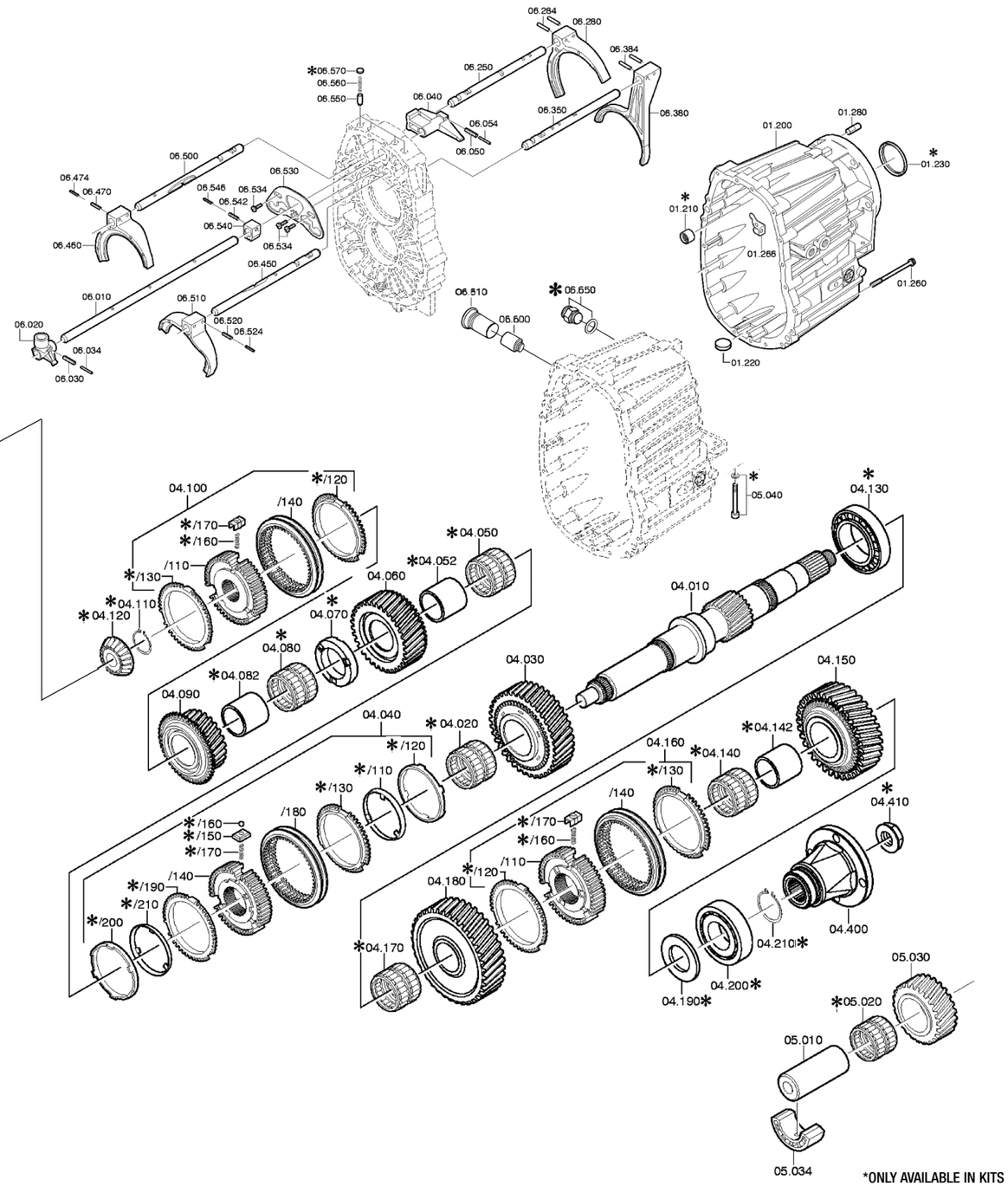

For Parts Reference Only. Drawings may not appear like actual part.